EXPERIMENT 8

MOSFET CIRCUITS

8.1 Objectives

In this experiment, MOSFET circuits will be examined, current and voltage values of the DC operating point of these circuits will be determined.

8.2Equipment List

1. DC Power Supply, Digital Multimeter
2. MOSFET (DC4007UBMS)
3. Resistors (10 kΩ, 100 kΩ)

8.3 Preliminary Work

1. Study MOSFET structers, nMOS and pMOS .
2. Calculate I_D, V_{GS} and V_{DS} values for each circuits in Figure 1.

8.4 Experimental Procedure

1) Construct the circuit given in Fig. 1. Measure and record the I_D, V_{GS} values from $R_{2=100k}$ step by step decrease. Plot I_D, V_{GS} characterization figure. V =10V, VD =5V

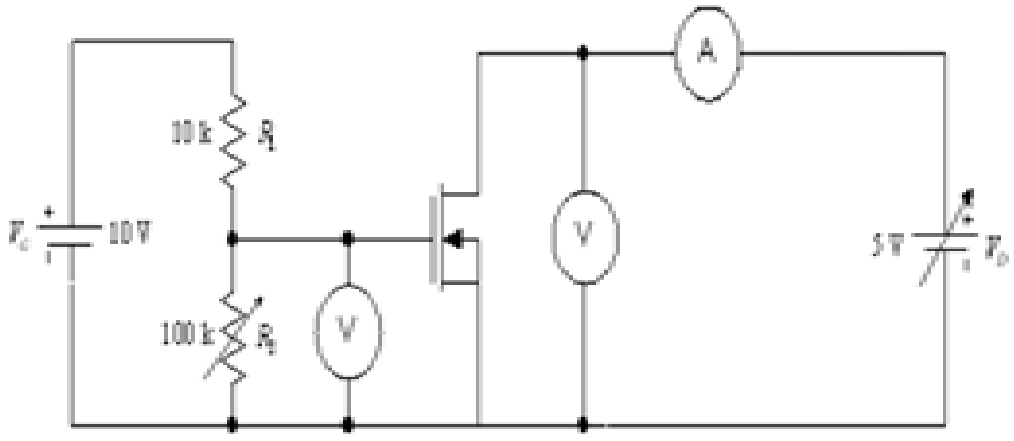

Figure 1

2) (*V* =5V, R_2=100kΩ) R_2 is steady so that V_{GS} have to be steady. Measure and record voltage between drain and source when voltage of drain is changing from 0 to 10. After that plot I_D, V_{DS} characterization figure.

3) Construct the fig 2. Try to keep constant I_D current (1mA) for R_1 value (0, 1k, 2.2k). Measure V_{GS} for I_D equals to 1mA.

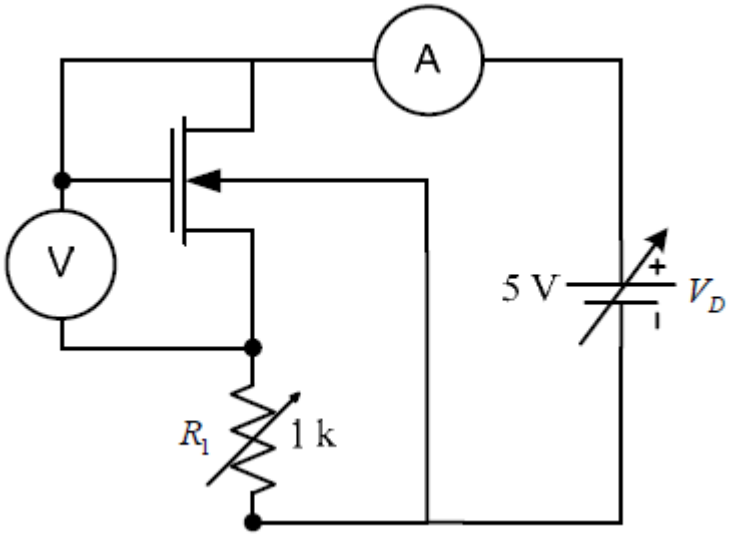

Figure 2

4) Why flow the same current for 3 different conditions?

V_{GS} =

V_{DS}	I_D

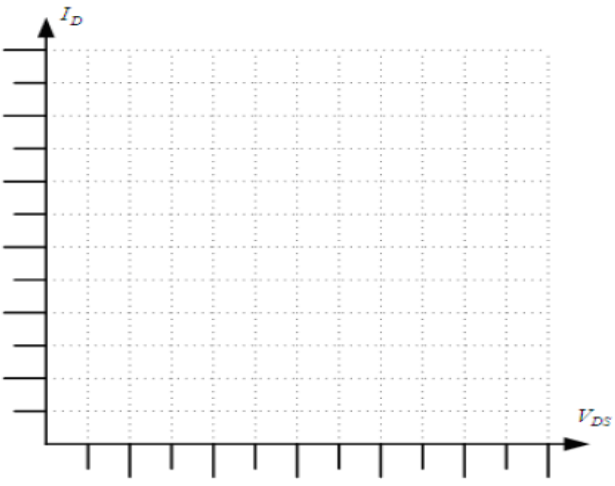

V_{DS} =

V_{GS}	I_D

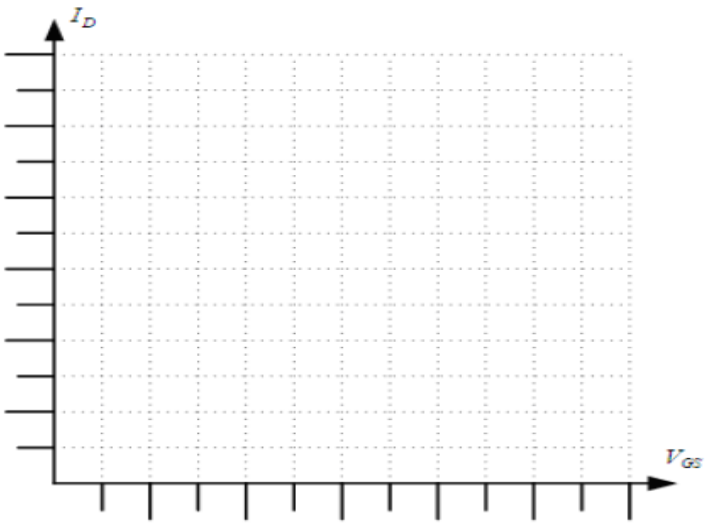

I_D =

V_{SB}	V_{GS}

Useful Information

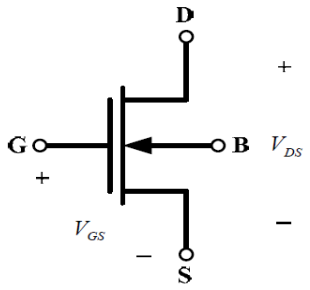

1) $V_{GS} - V_{tn} < 0$ cut off : $I_D = 0$

2) $V_{GS} - V_{tn} > V_{DS}$ active : $I_D = k_n\left[(V_{GS} - V_{tn})V_{DS} - \frac{1}{2}V_{DS}^2\right](1 + \lambda_n V_{DS})$

3) $V_{GS} - V_{tn} < V_{DS}$ saturation : $I_D = \frac{k_n}{2}(V_{GS} - V_{tn})^2(1 + \lambda_n V_{DS})$

CD4007

Pinout

CD4007UBMS
TOP VIEW

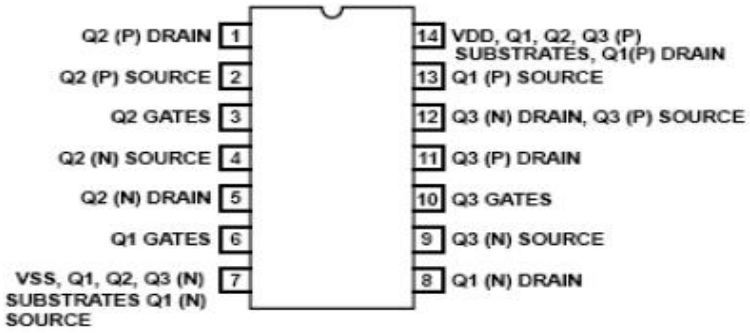

Functional Diagram

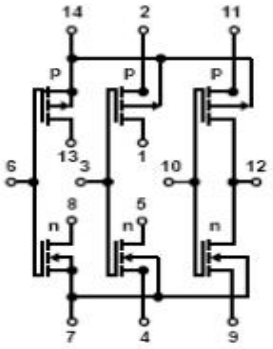

TERMINAL NO. 14 - VDD
TERMINAL NO. 7 - VSS

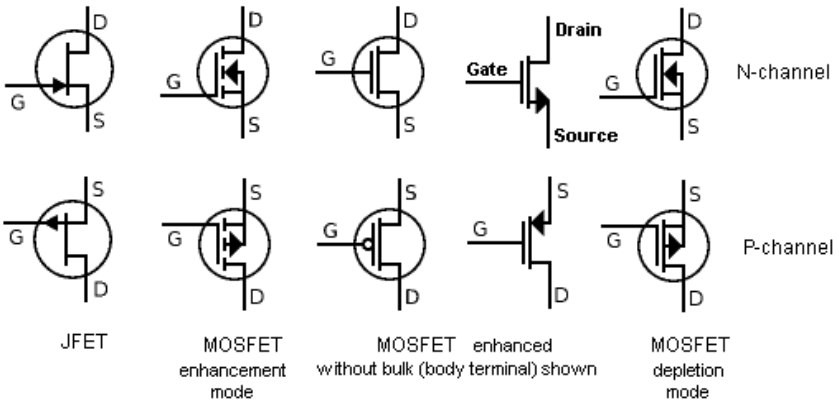

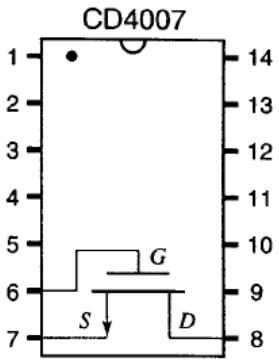

Different type MOSFET symbols